Logic

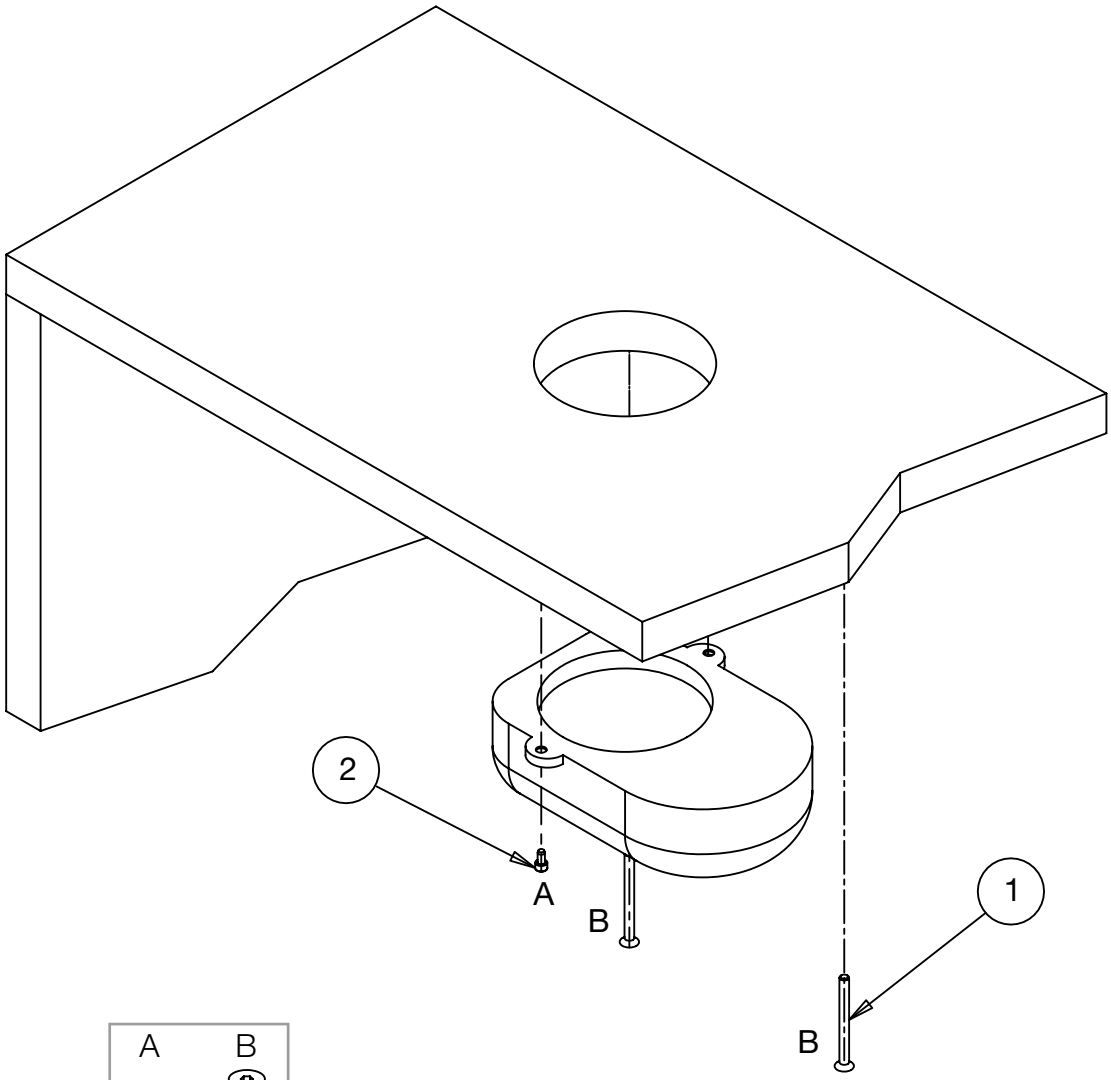

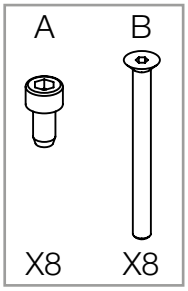

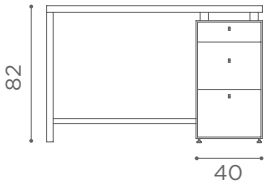

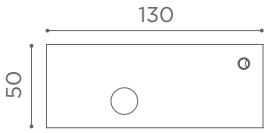

Logic

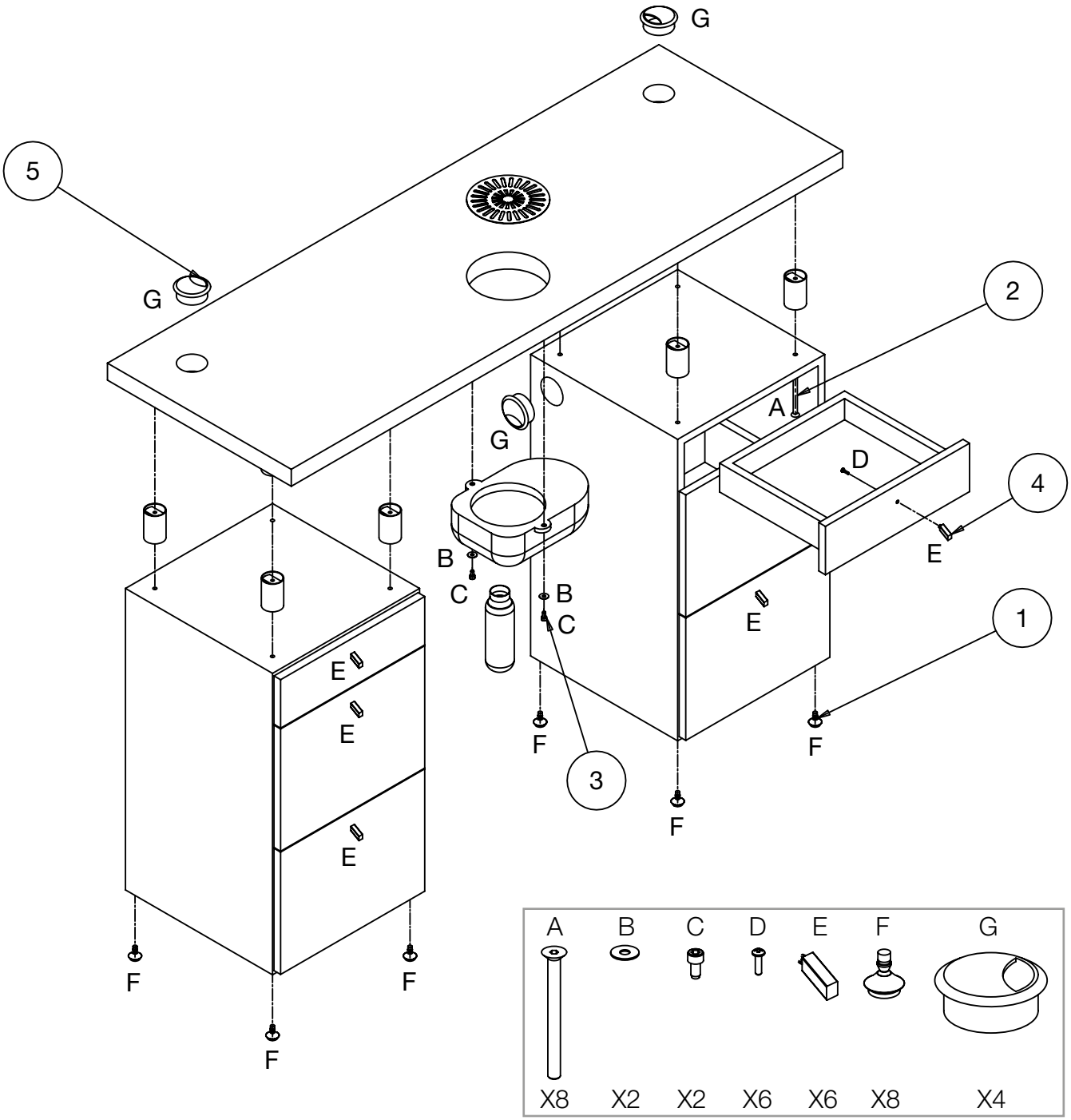
G
5
G
2
A
G
D
4
B
E
C
B
C
E
1
E
E
F
F
3
F
E
F
F
F
A
B
C
D
E
F
G
X8
X2
X2
X6
X6
X8
X4

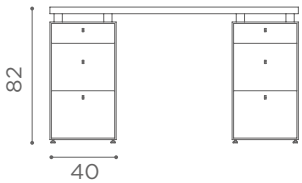
82
40

150
50
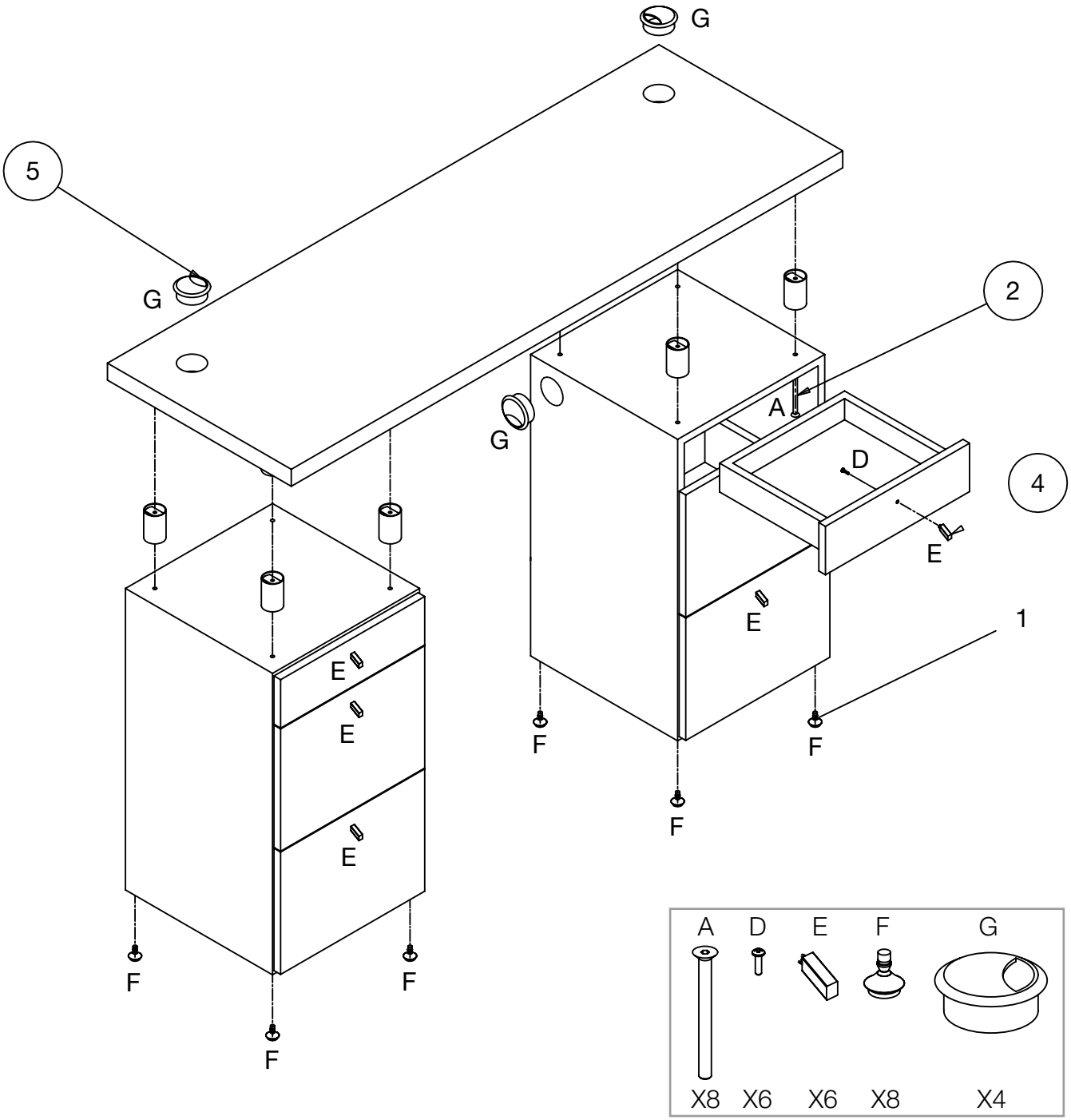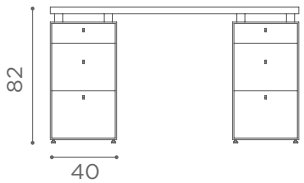
Logic